PROCTECH 4TR3
Final Report

Aquaponic System

Dr. Zhen Gao

George Chen 001331928
Keven Gao 400243256

NOTE: By including our names on the cover, we hereby acknowledge that the work is our own. We also acknowledge that the work was done at McMaster under our supervisor. By printing our name on the electronic copy, we acknowledge that this is equivalent to signing our signature on the document

Abstract 3
Introduction 3
Literature Review and Project Overview 4
Objective 4
Literature Review 4
Project Components 5
Project Implementation 6
First Draft (4TR1-Midterm) 6
Second Draft (4TR1- Final) 8
Current Design (4TR3-Midterm) 10
Electrical Design 12
Analog Channels 12
Digital Channels 13
DC and AC Power 14
Auto Feeder Design 15
Parts List 18
Integration of AI 19
SYSTEM OVERVIEW 20
HMI and Data Acquisition 21
Sensor Data 23
Discussion 25
Project Timeline 26
Conclusion 28
References 29

Abstract

This project will focus on building an agricultural system typically known as aquaponics with remote monitoring and automation integration. Aquaponics is an ecosystem that combines raising fish and growing plants without a constant need for fertilization or cleaning [5]. In this system, fish waste will be the plants' main fertilizer source. The plants will convert the waste and purify the water and return it to the fish tank [6].

By introducing automation, this project aims to improve the system by introducing remote monitoring of critical parameters like phosphorus, nitrite, potassium, temperature, and overall plant health [3]. Additionally, it will provide real-time alerts in the event of the need for human intervention. This integration should reduce monitoring from humans. These additions are expected to reduce manual monitoring, improve reliability, and support a more stable growing environment.

Introduction

Automated systems in agriculture can improve the well-being of plants and animals. Aquaponics itself is an automated system with plants and fish surviving in tandem. With integrated sensing and potentially robotics, it can increase production and improve quality [3].

Using IoT infrastructure, including the use of sensors, internet connectivity, cloud solutions, and computer-based AI, users can produce massive amounts of data that can be analyzed [8].

IoT enables data-sharing among multiple parties. This includes a wide range of tools, devices, and applications. In the agricultural sector, IoT is slowly becoming a part of everyday life for farmers to increase efficiency and research [3]. IoT allows the storage of data while retrieving vast quantities of “live” data. This technology is ideal for enhancing the understanding of the effectiveness of each given farming practice. Looking into aquaponics, the data that are being collected by sensors can enable the optimization of the number of fish and correlate it to the plant health. Thus, searching for the ideal fish to plant ratio for best practices.

Literature Review and Project Overview

Objective

An aquaponic system is already a naturally occurring, automated system. The key elements that the addition of monitoring provides are an alarm and notification system. The monitoring system should be monitoring the process variables, such as

- Phosphorus
- Nitrogen
- Potassium
- water flow rates
- Temperature
- filter conditions
- water level
- and the quality of the plantation.

Based on the process variables, such as temperature and flow rate, these should be automated as control variables.

Literature Review

Articles on aquaponics systems are readily available online, and some even include IoT integration. The articles with IoT implementations are big systems with a couple of hundred to thousands of gallons of water capacity [1]. This project is focused on a small scale at home size for the average person.

From these articles, we can identify a couple of key monitoring components that will be important. These include flow, pH level, water levels, temperature, chemical levels (ammonia, nitrate, nitrite), and light levels [7]. Since our project has a budget and our focus is low cost, we will also need to ensure that the automated system will be kept low-cost as well. With low cost, some sensors will not be purchasable as they only offer industrial-level sensors. Ammonia, Nitrate, and Nitrite sensors will need to be substituted with at-home aquarium testing kits. Unfortunately, that will remove the autonomous testing aspect but will still reduce the overall need for daily monitoring of the system.

Aquaponics farming is not the standard at the moment. Furthermore, IoT adoption in agriculture is still in its early stages. It'll take time before it becomes the standard. IoT comes with its own challenges, such as communication. Often relying on LoRa, which has a smaller data transfer rate.

Project Components

The project will use a media-based aquaponic system. This system has a simple design and should be beginner-friendly. The components needed will be:

Core Section	Component	Detail	Vendor
Structure			
		Fish Tank	Self Supplied
	Wood		
		2x4 Wood planks	Rona
		1x4 Wood planks	Rona
Hydraulic			
	Main Pump		
		DC 12V Water Pump	Amazon
	Drain Pump		
		Small Submergable Pump	AliExpress
	Tubing		
		1inch diameter Tubing	Rona
		1/2 inch diameter Tubing	Rona
Electrical			
	AutoFeeder		
		ServoMotor	Self Supplied
		Arduino Uno	Self Supplied
	Sensors		
		Arduino MKR WAN 1310	Self Supplied
		Keyestudio GUVA-S12SD 3528 UV sensor	Self Supplied
		Keyestudio TEMT6000 Ambient Light Sensor	Self Supplied
		Keyestudio Analog Temperature Sensor	Self Supplied
	Pumps		
		Arduino Uno	Self Supplied
		Level Sensor	AliExpress
		24V Power Supply	AliExpress
		2X Relays	Self Supplied
Agriculture			
		Clayball	IKEA
		Lettuce	Costco
		Fish	PetSmart

The components can be bought at several places. We will also look for the cheapest possible options to ensure minimized costs. Several places we will look to purchase include, but are not limited to, AliExpress, Amazon, Home Depot, and Walmart.

An automatic feeding system has been developed and is shown in a later section of the report. The parts will most likely be 3D printed and have been designed using AutoCAD Fusion. All aspects of automation will be controlled by the microcontroller, and data will be sent to the cloud, where the user can monitor and be notified to check on system parameters.

Project Implementation

First Draft (4TR1-Midterm)

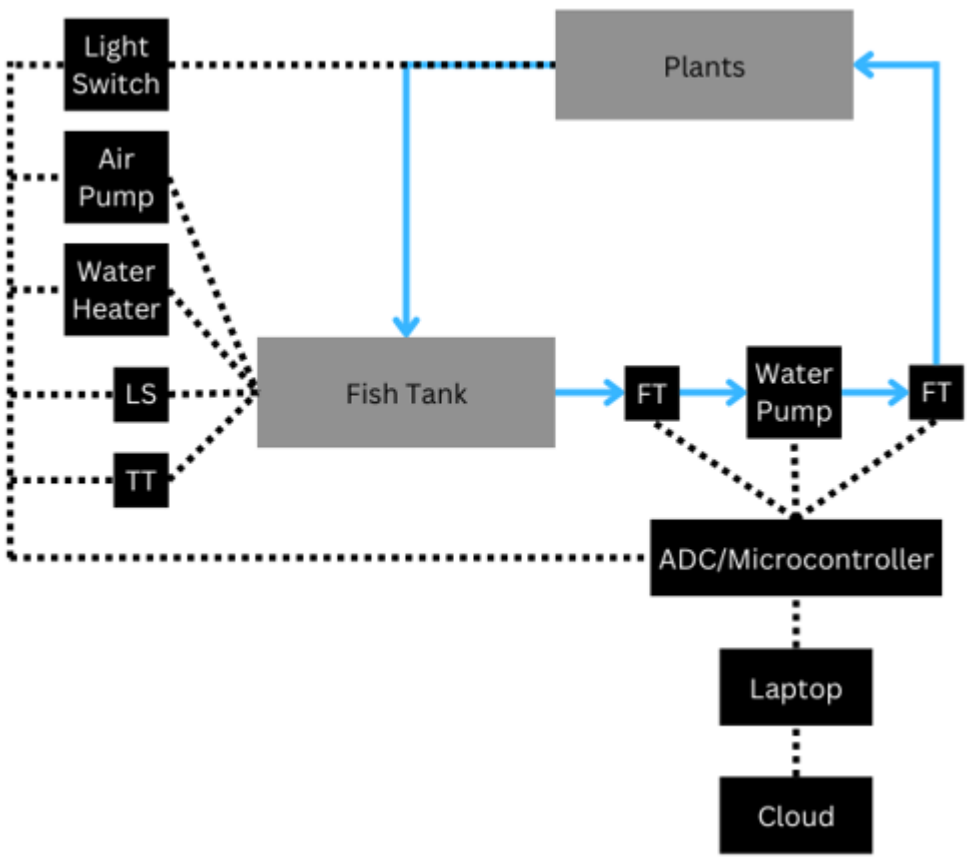

The design of the automated aquaponics system is shown in the above figure. The fish tank is monitored for its liquid level and temperature. The air pump and water heater may not be connected to the microcontroller. Depending on the model, these 2 components could have their own PID controller making it an independent control variable. The water flow is

represented as the blue solid lines while data/electrical wiring is shown as the black dotted lines. There will be two flow transmitters, one before and one after the water pump. The redundancy is to ensure that the pump is running fine. If the budget is tight, we can use only 1 flow transmitter after the pump which ensures flow. We will have a light transmitter switch that will ensure the lights are on. Additional support systems may be needed as we progress and will be added on as more documentation is created.

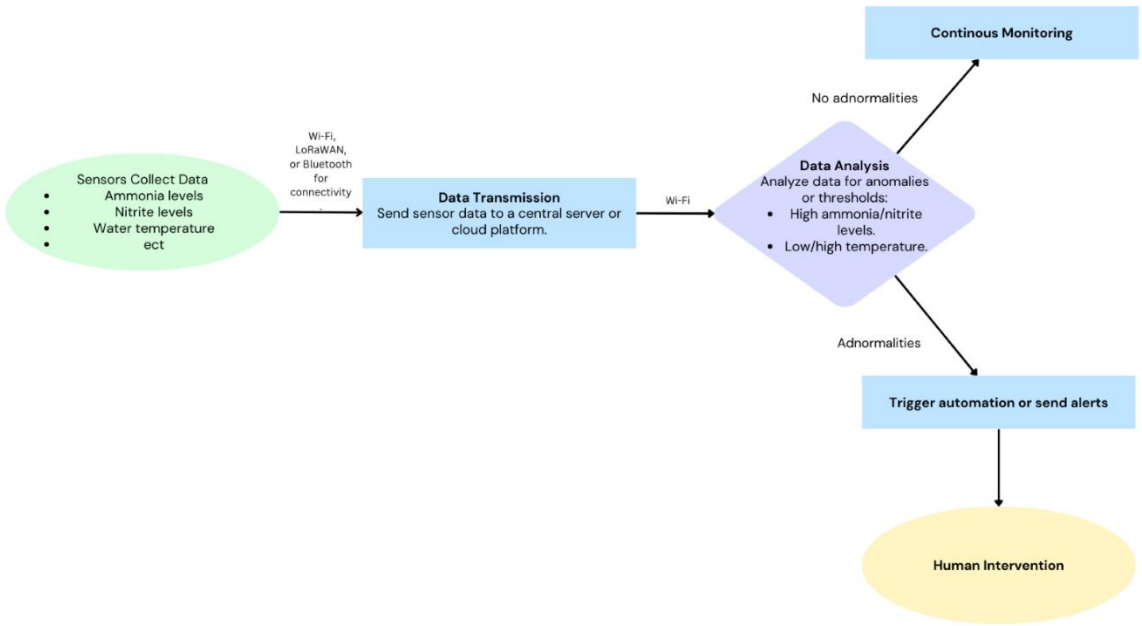

The automation of the project will slightly change due to cost. Things like ammonia, nitrate, and nitrite sensors do not come in cost friendly/cheap options as they are mainly used for industrial settings. These chemical levels will need to be checked on something like a monthly basis with an at home aquarium testing kit. Other than a monthly check-in, the system is designed to be hands off until an alert pops up notifying the user of an alarm.

Second Draft (4TR1- Final)

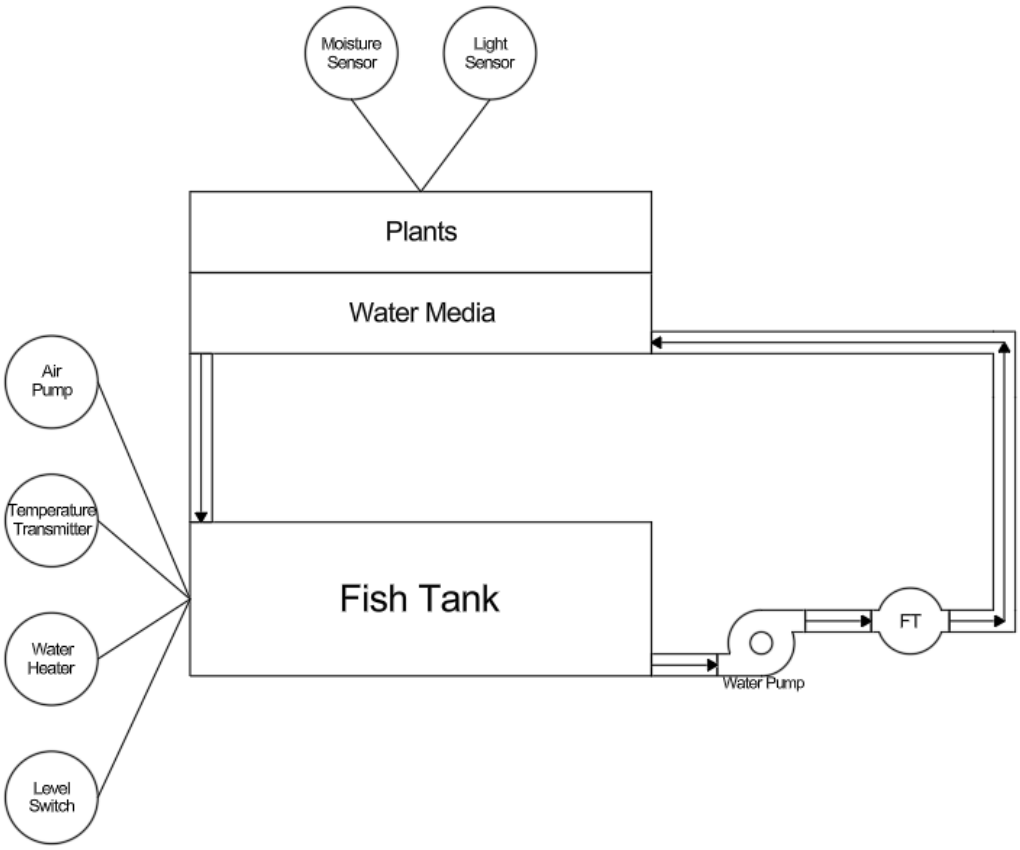

The second design adds moisture sensors to the plant area ensuring water is being absorbed into the soil. This moisture sensor at the soil can also indicate any blockages that may exist at the return line to the fish tank, which would cause a high moisture alarm indicating some sort of flooding. The second Flow Transmitter was removed as it is too redundant in this system. A single flow transmitter at the output of the pump will suffice to monitor the overall flow and condition of the pump.

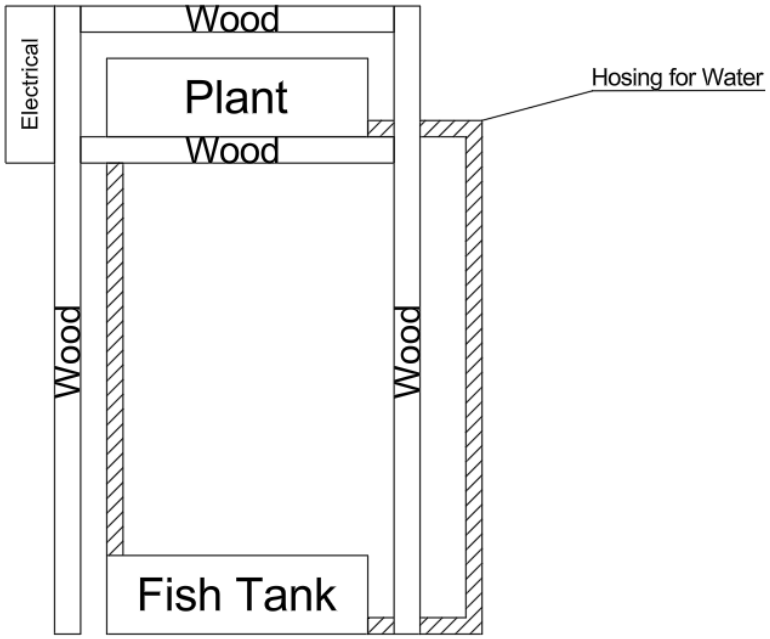

The current build plan is roughly designed above. It is a simple design where a wooden frame will be used to encompass and support the system. An electrical section will be mounted at the top for ease of access. This will be where the microcontroller will be situated, wiring will run along the wooden frame to the sensors and devices. Dimensions are not yet determined as our tank size and plant area have not been finalized yet.

Current Design (4TR3-Midterm)

The current iteration is the final design and the working prototype of our capstone. The aim was to make the design more compact by having the frame be a removable frame on the fish tank. Compact design allows components to be closer together, a modular system, and lower expense.

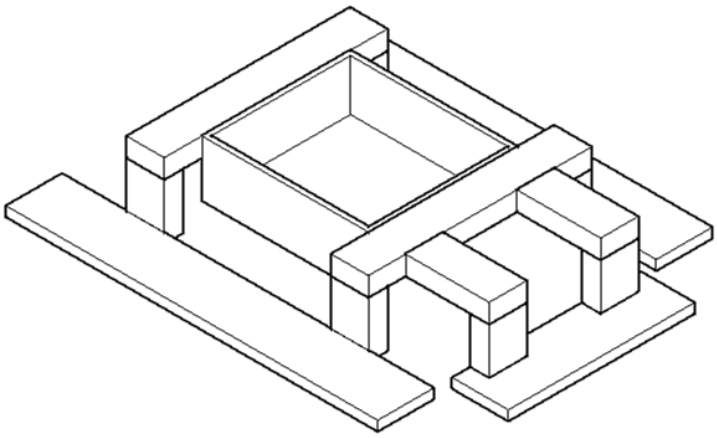

Isometric View of the Frame

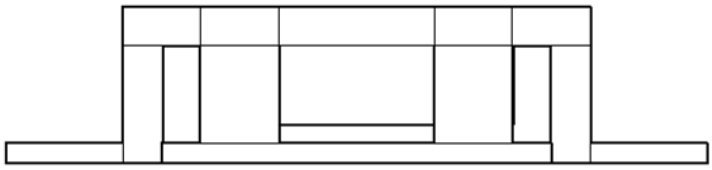

Front View of the Frame

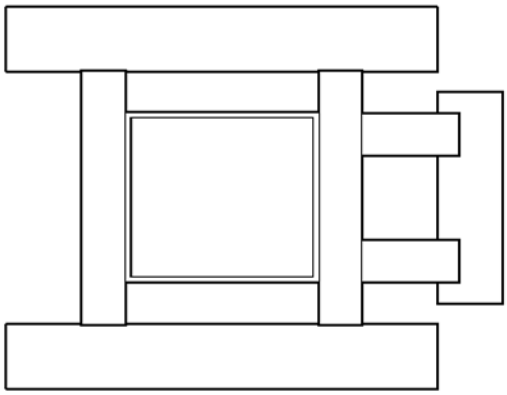

Top View of the Frame

The design still has its core aspects and functionality. The basket in the middle is where the plants will be. A pump will be mounted to take the fish tank water to the plant's basket. Microcontrollers, breadboards, sensors, switches, and pumps will be mounted on the side planks. There will be a drain installed in the basket for the water to flow out.

While planning out the layout, 3 main points were discussed that helped make the pivot to this type of design. The first point was how big the result would be with a frame. The second point was how we can bring this into the showcase. The last point was how expensive our overall costs are. As size matters and is tied to the 3 points listed, we figured that we should design a modular piece where the overall system will come in 2 pieces: the frame and the tank. By doing so, it now makes transporting a lot easier, and we require fewer wood, nails, screws, and brackets to secure.

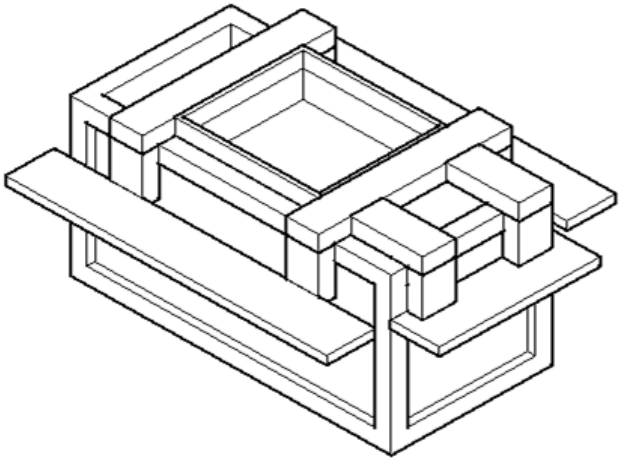

Isometric View of the Frame and Tank Together

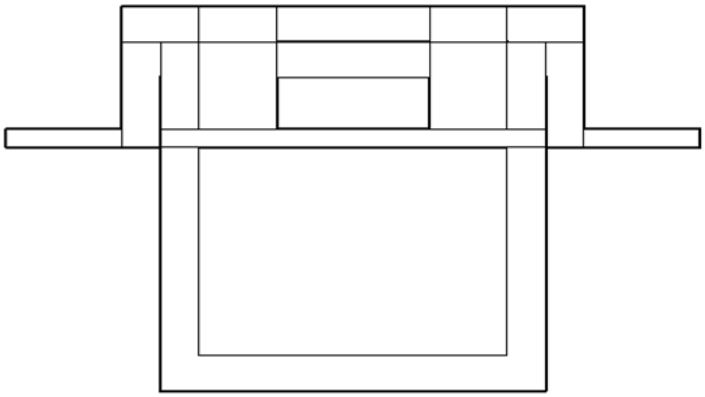

Front View of the Frame and Tank

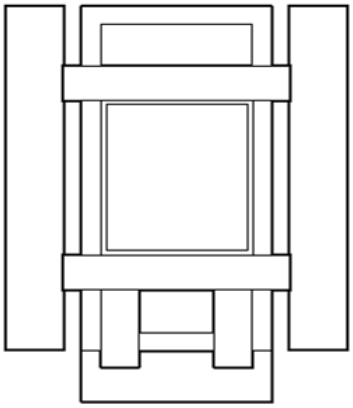

Top View of the Frame and Tank Together

Electrical Design

A schematic of how each component is expected to be connected to the system is shown below. To simplify it, each device and sensor were represented as either 4 or 2 wired components. We understand that sensors and devices come in many different wiring setups, such as 2, 3, or 4 wires. As we do not have our physical components yet, the simplified designs are only to show our expected electrical connections and are not a reflection of the finalized electrical schematic.

Analog Channels

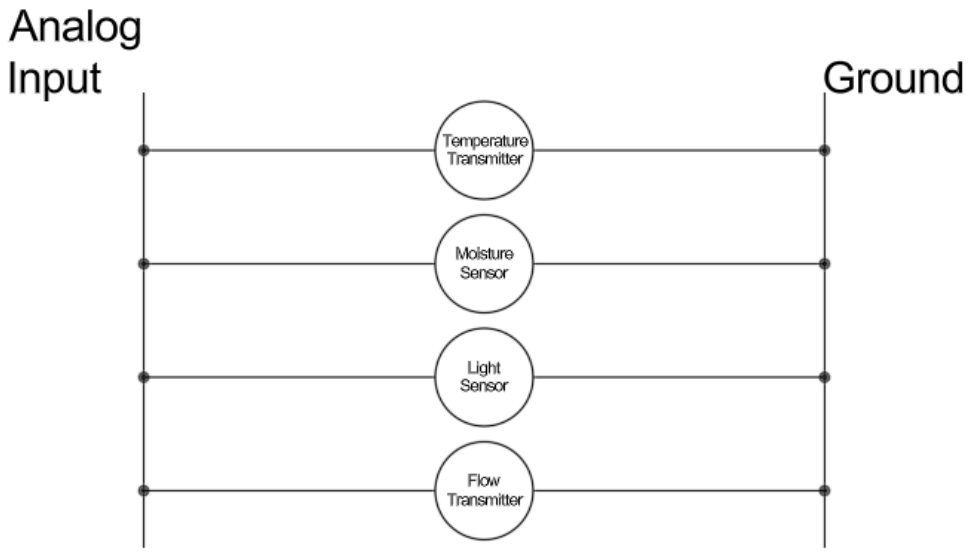

The analog input is part of the microcontroller's setup. The signal wire from the sensor is connected to the analog input channel for the 0 -5VDC signal generated, and the second wire is connected to ground. As the system does not have any analog outputs, there is no representation for any analog output channels in the current schematic as the system does not have any analog outputs.

Digital Channels

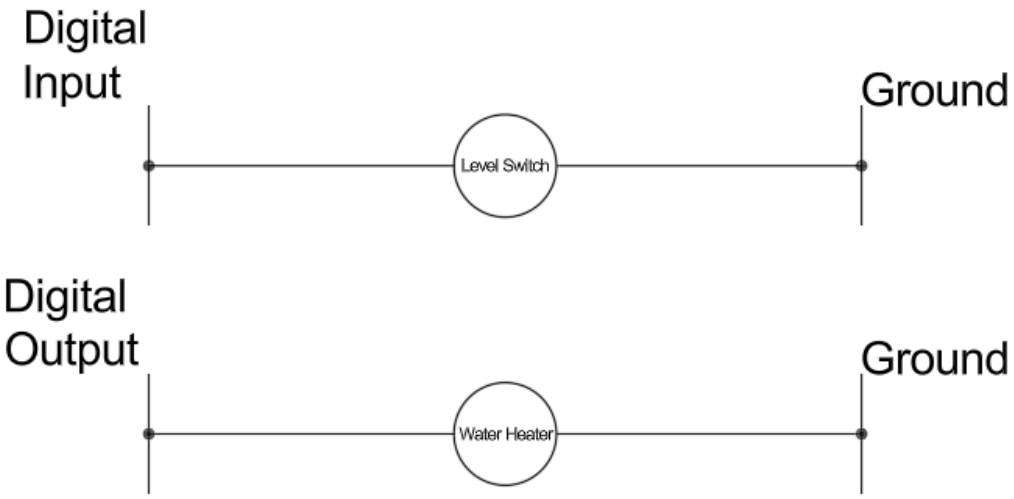

Digital inputs and outputs refer to the microcontroller/relay channels. 2 level switches will be used to represent the water level of the tank. In normal conditions, the Low Level Switch will always have a signal relaying that the water level is above the minimum. The High Level Switch will not have a signal during normal conditions, relaying that the water is not about to overflow. A low-level warning will be sent when both High and low-level switches are in an off state. A high-level warning is sent when both high and low-level switches are in an on state. An error warning is sent when High is on while Low is off.

Digital output is for the water heater in the tank to prevent low temperatures for the fish. The heater will turn on when the microcontroller determines that the temperature from the transmitter is low. Depending on the heater that will be purchased, the temperature transmitter and water heater may be an independent system outside the control of the microcontroller.

DC and AC Power

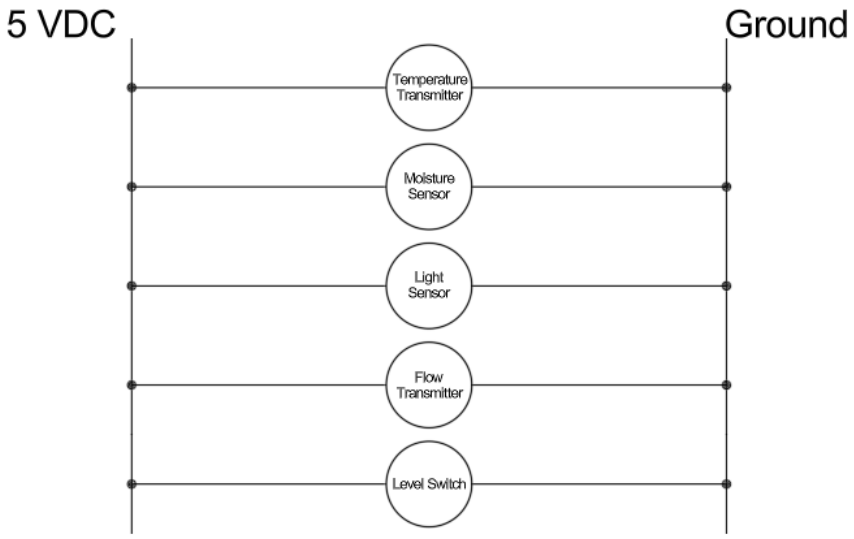

The power for all the sensors we will use will likely be in the 5V range, which works well with Arduinos. The schematic is simple, where device power is a 2-wire setup where 5 V is connected to a wire, and the other wire is connected to ground.

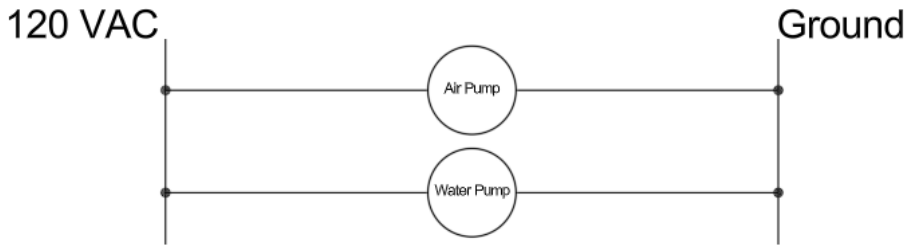

For some devices, we are expecting them to be connected to outlets. North American outlets are 120 VAC, similarly in a 2-wire fashion for the 2 prongs, live wire and ground.

Auto Feeder Design

The initial design of an auto feeder system is shown below. The design is a simple turbine setup in an enclosed space. When it is time for feeding, the turbine is connected to a motor, which will spin pushing food into a hole. This design is a recreation inspired by aquarium fish feeders from online [4].

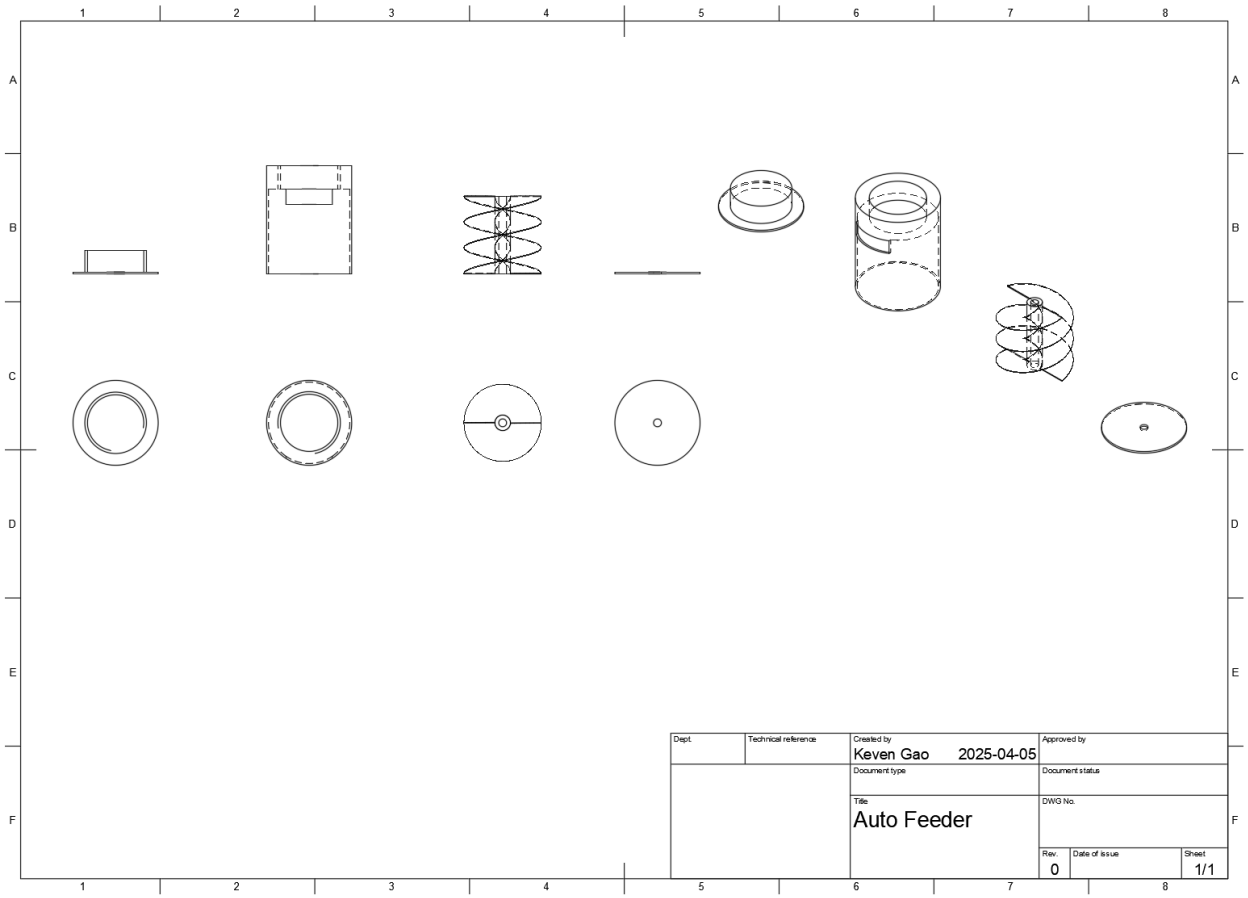

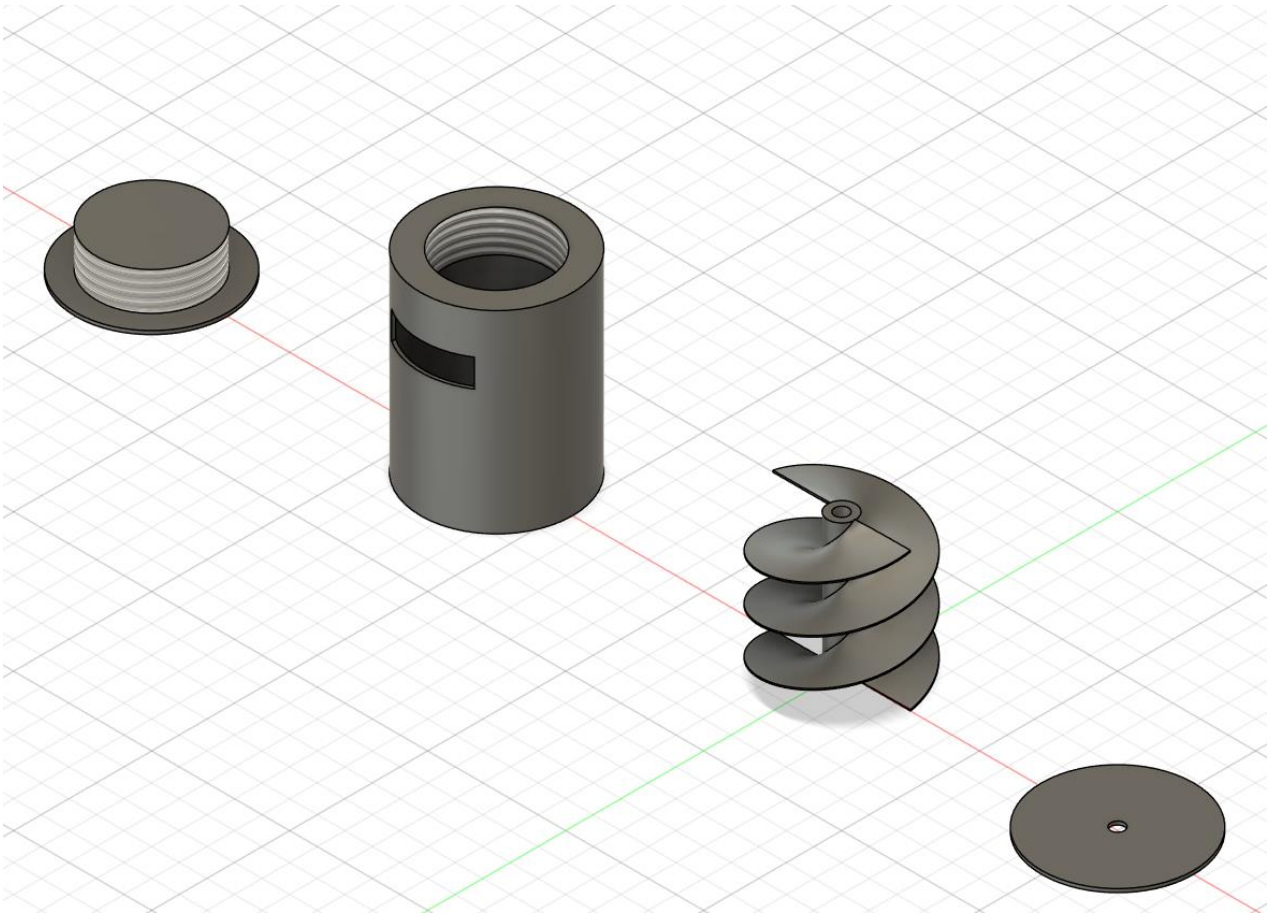

The 3D rendering of the parts is shown above. From left to right, first we have the removable cap, where refilling of the device is made. Second is the body of the auto feeder, the cap and the body are threaded to allow for closing and opening. Third is the turnstile. It is a double helix designed to push food into the hole during feeding time. The fourth and final item is the bottom of the device. The body is currently opened at both ends for assembly. The hole is for a shaft to control the movement of the turnstile.

The goal of designing our own auto feeder is to allow it to be incorporated into the overall automation system for our project and not act as an independent system. This allows the user to change feeding schedules and/or adjust settings remotely, possibly. By designing and printing our own parts, we can also cut down on costs a little bit.

We did notice the design of the auto feeder can be greatly improved. Unfortunately, we did not have enough time to implement a design change and will take this as a learning opportunity.

The flaw with this current design is that the spiral to push food out was attached to a servo motor that only spun 180°. This would make the spiral not spin continuously allowing for

food to be pushed out. The mounting of the feeder as well could have been redesigned too.

With the flaws that we discovered a second version could have been designed and implemented with design changes. To address the spiral issue, if we wanted to keep the servo motor, we could add a ratcheting gear to the spiral which would make it spin in one direction only. We could also replace the servo motor with a stepper motor which would turn continuously.

For the ease of mounting the feeder frame itself could have 3D printed brackets to screw into the wooden planks, a support piece could be added to where the motor is, so the system is more structurally intact and together.

Parts List

Parts List	
Item	Description and Use
Wood	Material used as the frame.
Screws and Nails	Type of fasteners used for building the frame.
Lettuce Plant	Plant used to grow in the growing bed.
Brackets	Metal support structure used for building the frame.
Cat litter box	Simple plastic box used as the growing bed.
Camera	Our visual monitoring component for the AI lettuce detector.
Water Pumps	Big water pump is to take water from the fish tank to the growing bed. Smaller pump is the draining system of the grow bed.
Air pump	Aeration system for the fish tank.
Raspberry Pi	AI module control.
ESP32	Microcontroller for the system.
Relays	SPDT relays used to control higher power system.
Temperature Sensor	Used to monitor the ambient temperature of the plants.
Light Sensor	Used to monitor the amount of light the plants are receiving.
Level Switch	Low and High level monitoring switch of the grow bed's water level.
UV Light Sensor	Monitors the amount of UV the plants receive.
Tank Heater	Small Heater to keep the tank water at an optimal temperature.
12V Power Supply	Used to power the 12V equipment.
Clay Pellets	Material used as the growing media, allows for easy drainage.
Tank and Fish	Fish produce waste in the tank which is used to feed the plants.
Servo Motor	Driving motor of the auto feeder.

Integration of AI

We hope to integrate AI into the system for the user as alerts and events. The goal is to have a camera that will track the healthiness of the plant that is being grown. We have currently been looking at lettuce as a suitable plantation candidate that has datasets available online for AI use.

The concept in our system is very simple. We will have a camera connected to a microcontroller, which will analyze the lettuce's growth and report whether the lettuce is healthy or unhealthy. We have used Kaggle to research and use different datasets available for our use. To incorporate AI, we will need to build a model, train, and validate it accordingly. The process of training an AI model is fundamental to having accurate identification. We will be following along the process used in an article found online [2]. The article uses Raspberry Pi as the microcontroller, and TensorFlow as the software to train the AI model [2]. For our system, the microcontroller will most likely mirror and reference the article, we considered using an Arduino to simplify the number of controllers we may need but concluded that a Raspberry Pi is more powerful and better suited for this application. Our software will most likely also be TensorFlow as it is a well-established use case for AI. Our AI model will be trained in a similar manner where labeled images of unhealthy and healthy lettuce are used [2]. We will then validate and retrain the model as needed.

Once our AI model is trained sufficiently it will notify the user when unhealthy lettuce is detected. If the user decides that the lettuce is still fine, they can silence any future alarms that may trigger. Healthy lettuce will continue to grow and will not trigger any alarms for the user. The user should also be able to track the progress of the lettuce through the camera.

SYSTEM OVERVIEW

The project uses two coupled subsystems:

1. AI subsystem (Raspberri Pi):
   Runs Linux and the AI/ML stack to determine the health of the plant through the camera. The Camera will capture shot upon request from user and image will be ran through the model and sent to HMI to show if any nutrients are missing.

2. Control/IO subsystem (Arduino):
   Handles real-time tasks like reading sensors and driving actuators.

Data collected from sensors is transmitted from Arduino, while photos captured from the camera of the plant health will be transmitted from Raspberri Pi. Both data will be shown on

(refer to Appendix 2: Dual Coupling System Integration)

Raspberri Pi will use MobileNetV2 to reduce load. Initially planned to use CNN for AI however, due to lack of power and cooling, this has not been possible. Instead, dataset are put into classification folders. There are four classes: **0_FN (healthy), 1_N (nitrogen deficient), 2_P (phosphorus deficient), and 3_K (potassium deficient).**

Data are transformed through horizontally flipped, rotated, blurred, and reduced sharpness to reflect the images coming from the camera. The HMI from AI will be a separate port.

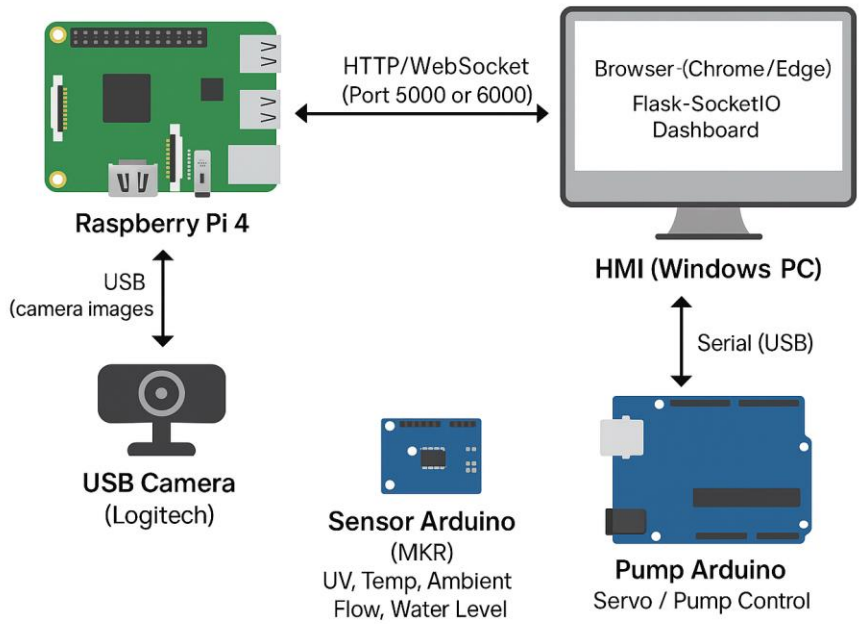

HMI and Data Acquisition

The HMI gives us sensor data and the Lettuce AI detection. Sensor data is on the ambient light, UV Light, Temperature, and Flow. These 4 data points help us monitor the condition of where the plant and fish are being grown.

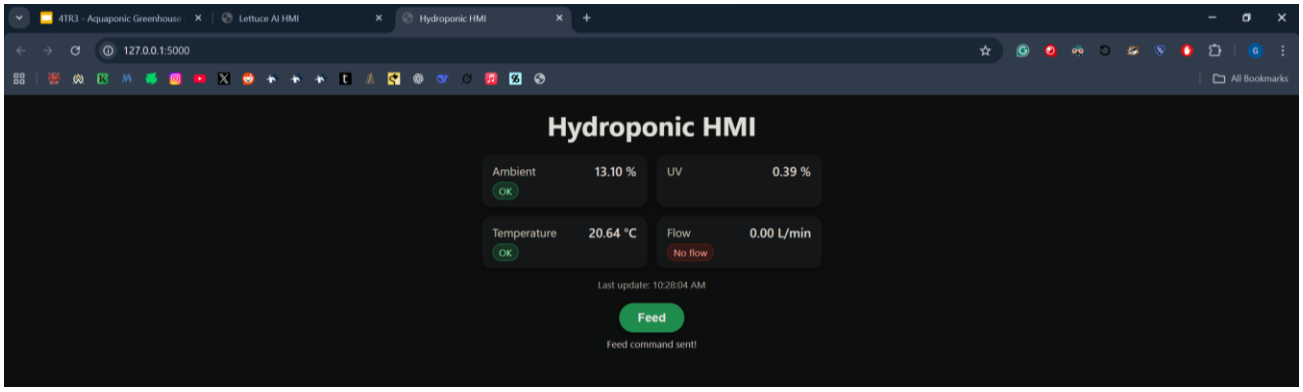

Ambient and UV light tells us how much light the plants can receive. Ambient would equate to brightness, while the UV can help determine how much sunlight is if the plant is being grown outdoors. While photosynthesis is more complicated than using 2 light sensors, these 2 are cheap and easy implementations for this project's monitoring capabilities.

Temperature sensor is a simple RTD circuit that changes resistance as temperature changes, which we would see in the 0-5 V range of the Arduino's analog input. This sensor will monitor the climate condition and notify whether additional heating or cooling is needed for both plants and fish.

Flow sensor lets us know whether the pumps are working or not and how much water is being pumped through to the grow bed. As the whole system is based on the movement of water, when flow is disrupted, it could be detrimental to the system. No flow could mean a pump replacement, a simple relay replacement, or even a loose hose. While too much flow could be a surge in power, or a faulty sensor. Either scenarios would let the operator know that they should check on the system.

Finally, in the Hydroponic's HMI, we also have the feed control. This lets the operator to enable the feeding process with the auto feeder.

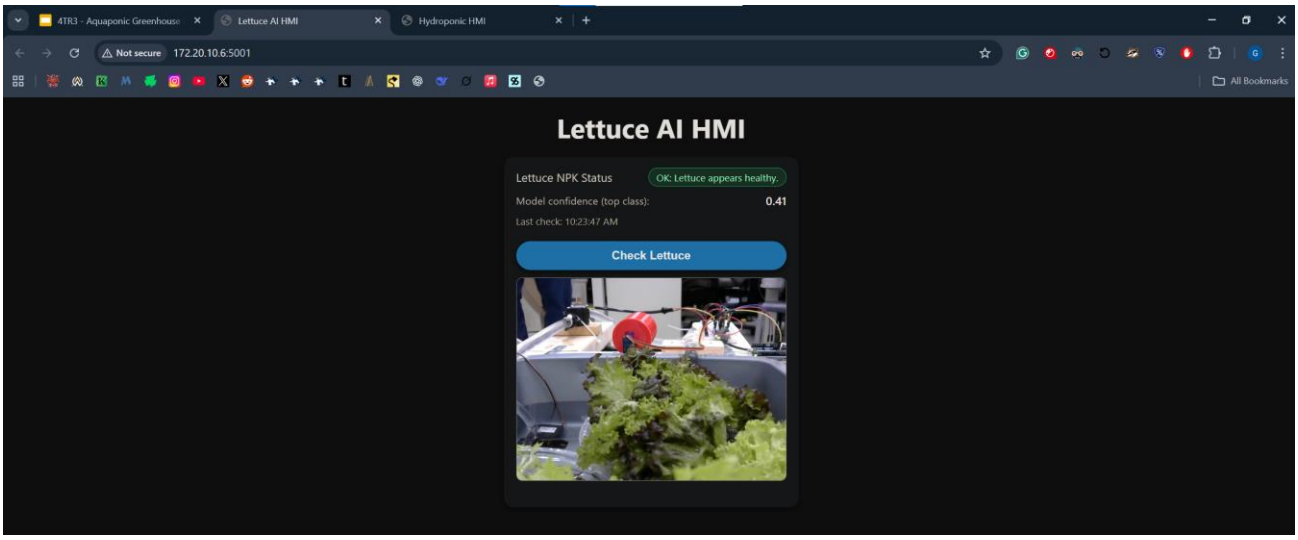

The Lettuce AI HMI is very simple as it takes a picture of the lettuce in the grow bed and the AI algorithm then determines whether this is a healthy lettuce or an unhealthy lettuce. As seen in the screenshot above, this is what the HMI looks like and how it works for the operator.

Sensor Data

timestamp	ambient_percent	uv_percent	temp_c	flow_l_min
2025-12-03T23:33:43	19.45	0.49	21.7	0
2025-12-03T23:33:43	10.85	0.2	21.59	0
2025-12-03T23:33:44	8.8	0.29	21.59	1.85
2025-12-03T23:33:44	18.38	0.39	21.49	2.16
2025-12-03T23:33:44	8.7	0.39	21.49	2.13
2025-12-03T23:33:44	15.54	0.29	21.49	2.15
2025-12-03T23:33:44	21.02	0.39	21.49	2.18
2025-12-03T23:33:44	12.9	0.29	21.49	2.27
2025-12-03T23:33:44	8.11	0.29	21.49	2.19
2025-12-03T23:33:44	20.63	0.88	21.59	2.16
2025-12-03T23:33:44	7.72	0.39	21.59	2.11
2025-12-03T23:33:45	20.82	0.39	21.7	2.21
2025-12-03T23:33:45	18.48	0.29	21.59	2.19
2025-12-03T23:33:45	19.84	0.29	21.59	2.14
2025-12-03T23:33:45	17.4	0.29	21.38	2.11
2025-12-03T23:33:45	20.43	0.29	21.59	2.22
2025-12-03T23:33:45	20.82	0.29	21.38	2.26
2025-12-03T23:33:45	20.14	0.29	21.59	2.14
2025-12-03T23:33:45	13	0.29	21.49	2.21
2025-12-03T23:33:45	8.6	0.29	21.49	2.25
2025-12-03T23:33:46	20.33	0.29	21.49	2.24
2025-12-03T23:33:46	9.87	0.39	21.59	2.12
2025-12-03T23:33:46	15.25	0.29	21.49	2.23
2025-12-03T23:33:46	20.92	0.2	21.49	2.21
2025-12-03T23:33:46	9.97	0.49	21.49	2.19
2025-12-03T23:33:46	18.57	0.29	21.49	2.26
2025-12-03T23:33:46	18.38	0.39	21.38	2.17
2025-12-03T23:33:46	19.35	0.39	21.59	2.16
2025-12-03T23:33:46	12.81	0.29	21.7	2.18
2025-12-03T23:33:47	20.53	0	21.59	2.28
2025-12-03T23:33:47	16.91	0.39	21.49	2.23
2025-12-03T23:33:47	8.21	0.39	21.91	2.16
2025-12-03T23:33:47	20.82	0.2	21.59	2.23
2025-12-03T23:33:47	9.48	0.29	21.8	2.15
2025-12-03T23:33:47	11.83	0.29	21.59	2.23

The above is some of the data that the sensors collected. We can see that upon start up before the pumps start, we are recording 0 flow which is normal. As the system starts and operates at normal conditions, we get a steady 2L/min flow. The other sensors data are not fluctuating too much other than the ambient light which could be due to movement blocking light to the sensor. UV and Temperature do not change much as the system is indoors.

Discussion

The automated aquaponics systems allow users to let this naturally occurring automation process be more hands off. If this project had an unlimited budget and scalability, it could result and giant fish farm with hundreds of lettuce fields all operating with minimal supervision. The core concept of this project is taking the naturally occurring Nitrogen cycle and finding a way to make it into a compact and automated system. It can be practical for a small family as an option to grow their own food. If scaled for a very large system, it could be a viable option to produce fish and vegetables for a large population.

Other implementation is mostly based on the configuration of the plants and the fish tank. Some do not require any sort of pump, and the plants are floating on the water. Based on the requirements set out by everyone or company, the implementation of an aquaponics system can be vastly different. The key concept to use the waste produced through a fish natural digestive system, though is still found no matter what kind of system is implemented.

Our implementation allows for modularity and the implementation of many different instrumentations and controls to be implemented. For example, if we used a raft system, all our electrical components will need to dangle over water which is a high potential for failure of the electrical system. To address that situation we may need to spend a lot more money to ensure that everything is waterproofed or safe to use. While the current design is a media-based aquaponics system, customizability also makes it less easily scalable. This means that if we wanted a bigger fish tank, we would need to remake a whole new frame for a bigger sized fish tank. This would be the same case for a bigger growing bed; we would need to remake the frame to fit a bigger bed. This would also mean that all our wiring and devices may need to change. The pro of this system is that the implementation of it is simple, customizable, and cost effective. While our cons are that it is limited in scalability to go either smaller or larger.

Project Timeline

Task	Start Date	End Date	Task Owner	Notes
Project Design				
Research system design	2025-Feb	2025-Feb	Keven	done
Identify key process variables	2025-Feb	2025-Feb	Keven	done
Select sensors and automation tools	2025-Feb	2025-Feb	Keven	done
Create budget and procurement plan	2025-Feb	2025-Mar	Keven	done
System Construction				
Assemble aquaponics system	2025-Mar	2025-Mar	Keven	done
Test for leaks and water flow	2025-Mar	2025-Apr	Keven	done

Test structural integrity	2025-Apr	2025-Apr	Keven	done
Automation and Monitoring				
Install and calibrate sensors	2025-Sept	2025-Oct	George	done
Set up a central control system	2025-Sept	2025-Oct	Keven	done
Develop monitoring software	2025-Sept	2025-Oct	George	done
Implement alarm and notification	2025-Oct	2025-Nov	George	done
Automate control variables	2025-Oct	2025-Nov	George	done
System Testing and Finalization				
Introduce fish and plants	2025-Oct	2025-Nov	Keven	done
Monitor system performance	2025-Nov	2025-Dec	George	done

Conclusion

The integration of automation into aquaponic systems will increase the ease of operations. By monitoring key items and potentially automating some processes like flow rate and fish feed reduces the need for human monitoring. This project demonstrates the use of IoT in agricultural settings [3].

There are several limitations we faced:

- Lack of wireless communication tools: Sensors and arduino needs a physical connection and that creates messy wiring and inability to be truely IoT. Another way is to use LoRa network to get serial data from sensors and receive data wirelessly to be used on HMI.
- Computational power to run CNN: Raspberri Pi is not a great tool to run AI models on. It can run simple models like MobileNetV2.
- Poor production quality of 3D printing: The 3D printed autofeeder parts have too much friction and unable to print the 2 swirls in the design. Instead, the project were limited to 1 swirl

Given the high price of Nitrogen, phosphorus, and potassium sensors (NPK), it's much affordable to use AI as a replacement. However, give a chance, having a comparison between AI and the NPK and be able to adjust our confidence levels to get a more accurate result.

References

1. A.M Bassiuny, M.M.M. Mahmoud, R. Darwish, "Development of an economic smart aquaponic system based on IoT", Journal of Engineering Research, vol. 12, no. 4, pp. 886-894, Dec. 2024. [Online]. Available: https://www.sciencedirect.com/science/article/pii/S230718772300202X.
2. A. S. Alon and J. L. Dioses, Jr., "Machine Vision Recognition System for Iceberg Lettuce Health Condition on Raspberry Pi 4b: A Mobile Net SSD v2 Inference Approach," *International Journal of Emerging Trends in Engineering Research*, vol. 8, no. 4, Apr. 2020. [Online]. Available: http://www.warse.org/IJETER/static/pdf/file/ijeter20842020.pdf
3. M. McCaig, D. Rezania, and R. Dara, "A Scoping Review on Value Creation from Collaborations enabled by the Internet of Things in Agriculture," 2021 Fifth World Conference on Smart Trends in Systems Security and Sustainability (WorldS4), London, United Kingdom, 2021, pp. 1-5, doi: 10.1109/WorldS451998.2021.9514045.
4. PetSmart, "Top Fin® Fin Automatic Fish Feeder," Available: https://www.petsmart.ca/fish/food-and-care/feeders/top-fin-fin-automatic-fish-feeder-16405.html. Accessed: Apr. 6, 2025.
5. Rakocy, J. E., Masser, M. P., & Losordo, T. M. (2006). Recirculating Aquaculture Tank Production Systems: Aquaponics—Integrating Fish and Plant Culture. SRAC Publication, 454.
6. Somerville, C., Cohen, M., Pantanella, E., Stankus, A., & Lovatelli, A. (2014). Small-scale aquaponic food production: Integrated fish and plant farming. FAO Fisheries and Aquaculture Technical Paper, 589.
7. Thingstel, "IoT in Aquaponics," Thingstel Blog. [Online]. Available: https://www.thingstel.com/blog/iot-in-aquaponics/. [Accessed: Mar. 2, 2025].
8. J. M. Perkel, "The Internet of Things comes to the lab," Nature, vol. 542(7639)

APPENDIX 1: Construction of system

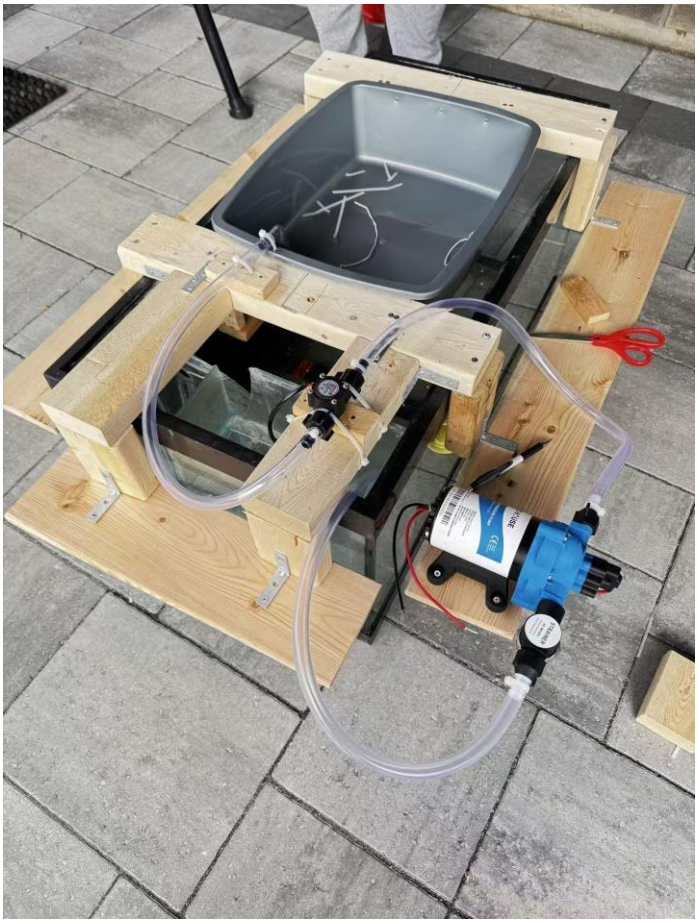

Appendix 2: Dual Coupling System Integration (Also attached with report)

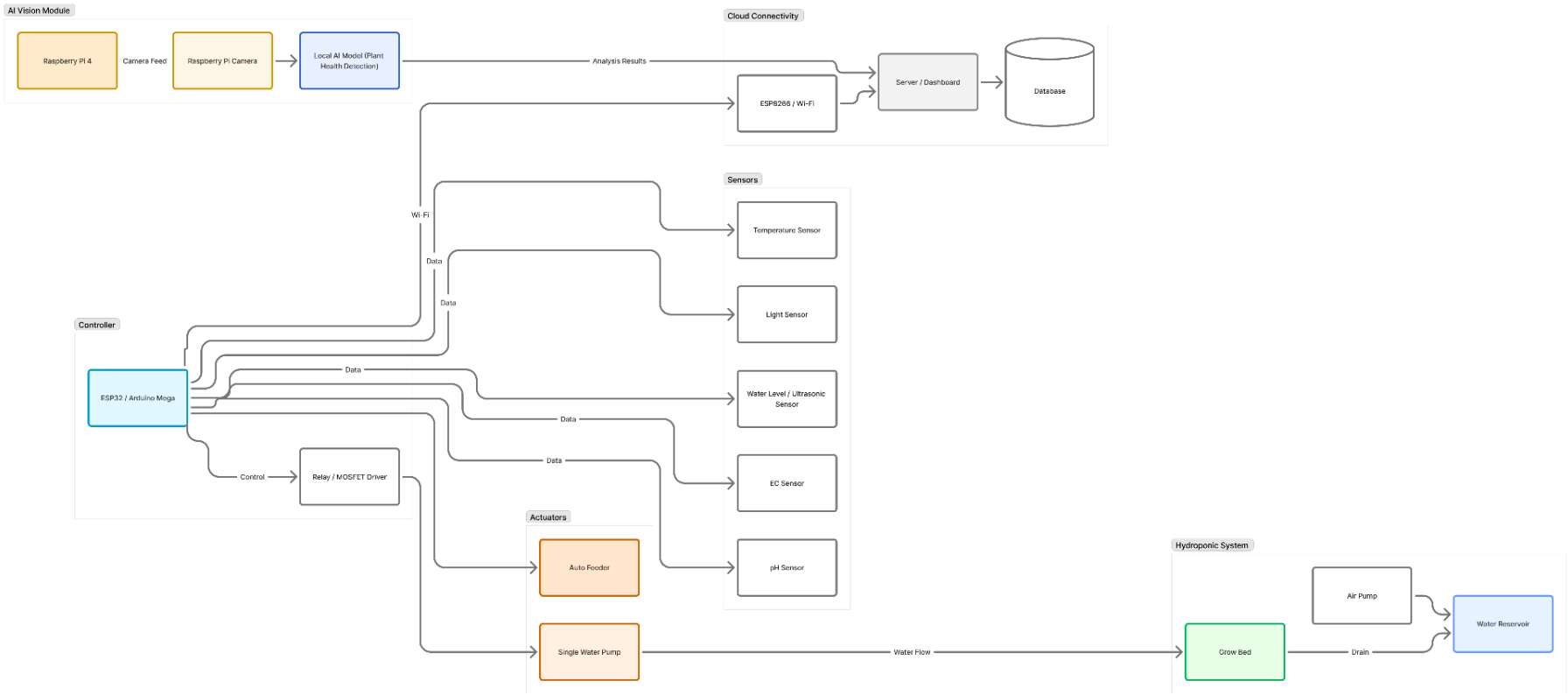
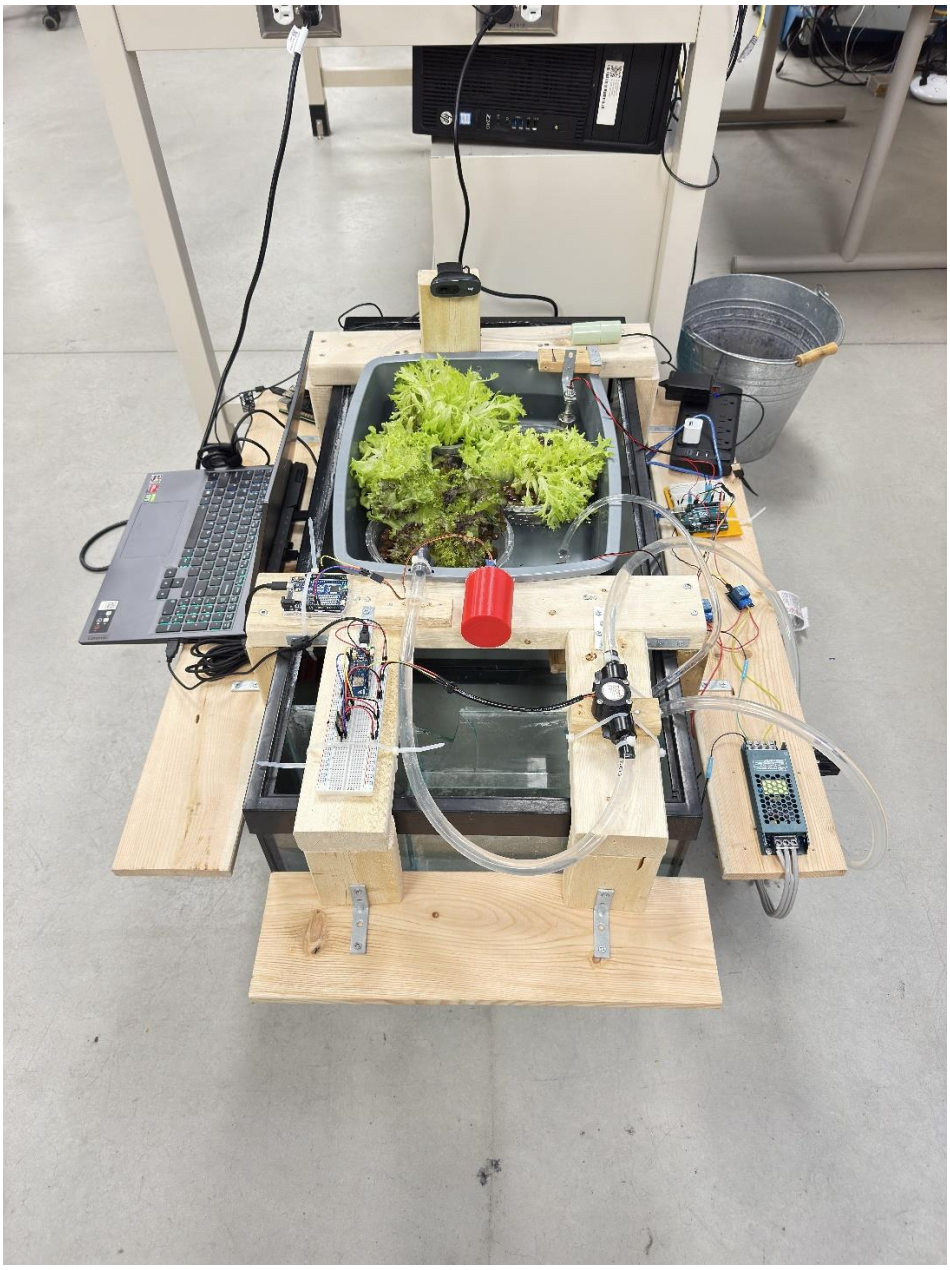
APPENDIX 3: Final Result of the System